REFERENCE COORDINATION DRAWINGS			
DISCIPLINE	DRAWING No.	DATE	REV
ELECTRICAL	NSW - A1 TITLE	11.06.2014	
ARCHITECTURAL			

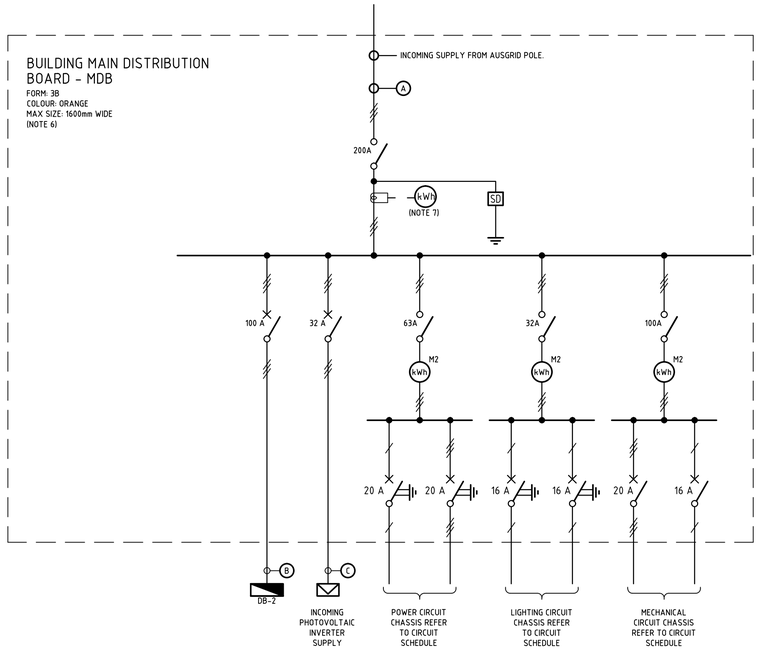

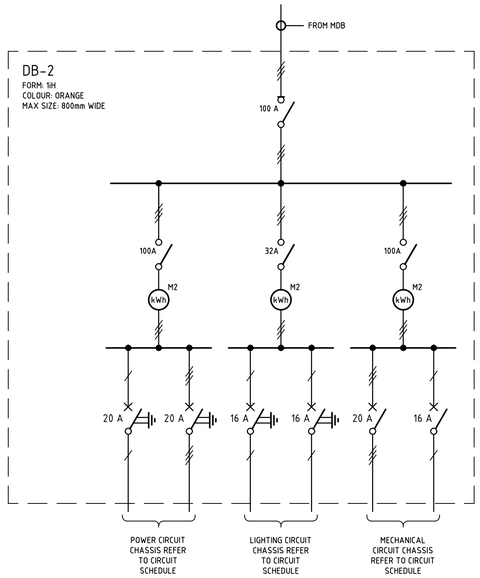

SINGLE LINE DIAGRAM NOTES

1. THIS DRAWING SHALL BE READ IN CONJUNCTION WITH THE ELECTRICAL SERVICES SECTION OF THE SPECIFICATION, THE ARCHITECTURAL DRAWINGS AND ALL OTHER RELEVANT SERVICES DRAWINGS.
2. REFER TO THE LEGEND.
3. UNLESS OTHERWISE INDICATED, SUBMAIN CABLES INSTALLED ON CABLE LADDERS SHALL BE SPACED IN ACCORDANCE WITH AS3008 TO ACHIEVE A DERATING FACTOR OF NO LESS THAT 1.0.
4. FIRE RATED CABLES APART FROM MIMS SHALL BE INSTALLED IN GALVANISED STEEL CONDUIT FOR THE ENTIRE LENGTH OF THE CABLE OR BE SUITABLY MECHANICALLY PROTECTED IN ACCORDANCE WITH AS/NZS 3013.
5. UNLESS OTHERWISE NOTED, ALLOW 30% SPARE POLE SPACE ON EACH SECTION OF EQUIPMENT IN ADDITION TO THOSE SHOWN ON THE DRAWINGS.
6. REFER TO THE ELECTRICAL SPECIFICATION FOR DETAILS OF SWITCHBOARD CONSTRUCTION.
7. PROVIDE A NEW AUSGRID ENERGY METER FIXED TO A BOVARA METER PANEL COMPLETE WITH REQUIRED FUSES AND LINKS.
8. SUPPLY AND INSTALL ENGRAVED RED WARNING LABELS AS REQUIRED AND IN ACCORDANCE WITH ALL RELEVANT AUSTRALIAN STANDARDS INCLUDING THE FOLLOWING:
   "WARNING-DANGER"
   "415VOLTS BEHIND"
   "LIVE BUSBARS"

CABLE SCHEDULE

REF	CABLE SIZE
A	4x1C 95 mm² Cu XLPE
B	1x4C 35 mm² Cu XLPE
C	1x4C 16 mm² Cu XLPE
D	-

REV.	DESCRIPTION	DRAWN	APP'D	DATE
2	CONSTRUCTION ISSUE	JRR	PGM	27.10.16
1	CONSTRUCTION ISSUE	JRR	PGM	27.09.16
0	CONSTRUCTION ISSUE	JRR	PGM	17.07.15
C	TENDER ISSUE	JRR	PGM	23.03.15

CLIENT :

Leichhardt Municipal Council
7-15 Wetherill Street
LEICHHARDT NSW 2040

ARCHITECT :

Dillon & Savage Architects
40 Quinton Rd, Manly, 2095
Phone: (02) 9977 3714 Fax: (02) 9977 8215
email: dsarchs@bigpond.net.au

WOOD & GRIEVE ENGINEERS
Wood & Grieve Engineers Ltd
A.C.N. 137 999 609
Level 6, Building B,
207 Pacific Highway, St Leonards
New South Wales 2065
Phone: 02 8484 7000
Fax: 02 8484 7100
Email sydney@wge.com.au
Web www.wge.com.au
PERTH
MELBOURNE
SYDNEY
BRISBANE
GOLD COAST
ALBANY
BUSSELTON
SHENZHEN
DARWIN

PROJECT:
LEICHHARDT PARK CHILD CARE

TITLE:
ELECTRICAL SERVICES
SINGLE LINE DIAGRAM
AND DETAILS SHEET

FOR CONSTRUCTION

DESIGNED :	PGM	VERIFIED :	PGM
DRAWN :	MPH	APPROVED FOR TENDER :	PGM
SCALE :	N.T.S.	APPROVED FOR CONSTRUCTION :	PGM

CAD FILE: E-500-SLD AND DETAILS SHEET.dwg PLOT DATE/TIME: 27.10.16 10:56 AM

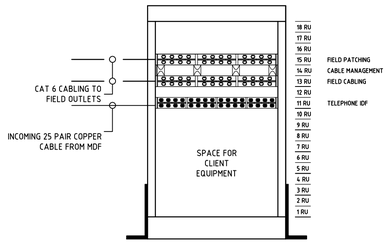

COMMUNICATIONS RACK

18 RU RACK
WALL MONTED

COMMUNICATIONS SCHEMATIC LEGEND

- FIBRE OPTIC TERMINATION BOX
- FIBRE OPTIC HUBS/SWITCHER (BY IT INTEGRATOR)
- PATCH PANEL
- TELEPHONE IDF
- CABLE MANAGEMENT UNIT
- FIXED SHELF
- FLY OR PATCH LEADS
- FIBRE OPTIC CABLE SUITABLE FOR EXTERNAL INSTALLATION
- UTP CABLE
- TELEPHONE CABLE SUITABLE FOR EXTERNAL INSTALLATION
- FIBRE OPTIC PATCH LEADS
- TELEPHONE MIMS CABLE

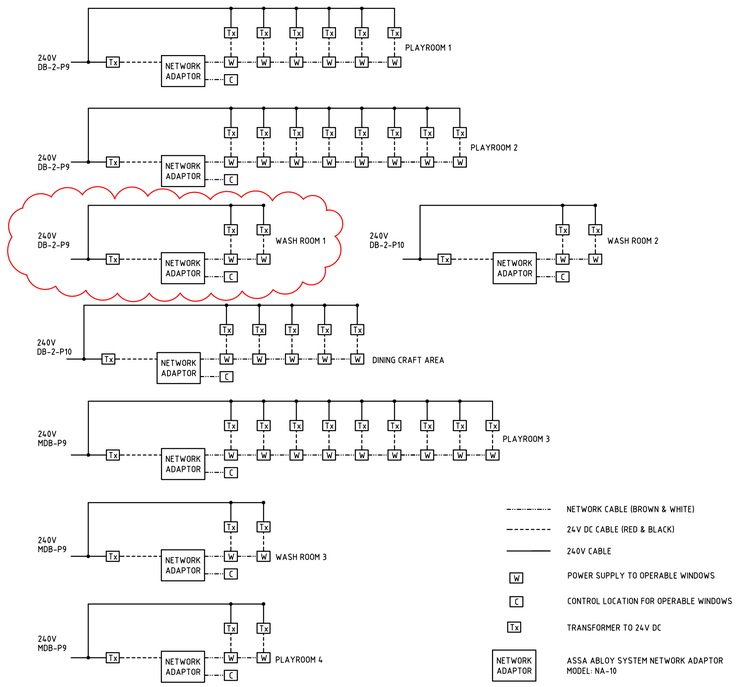

MOTORISED WINDOW WIRING DIAGRAM

North

PROJECT No.	DRAWING No.	REVISION
26687-SYD	E-500	2

A1 DRAWING - BUILDING SERVICES GROUP